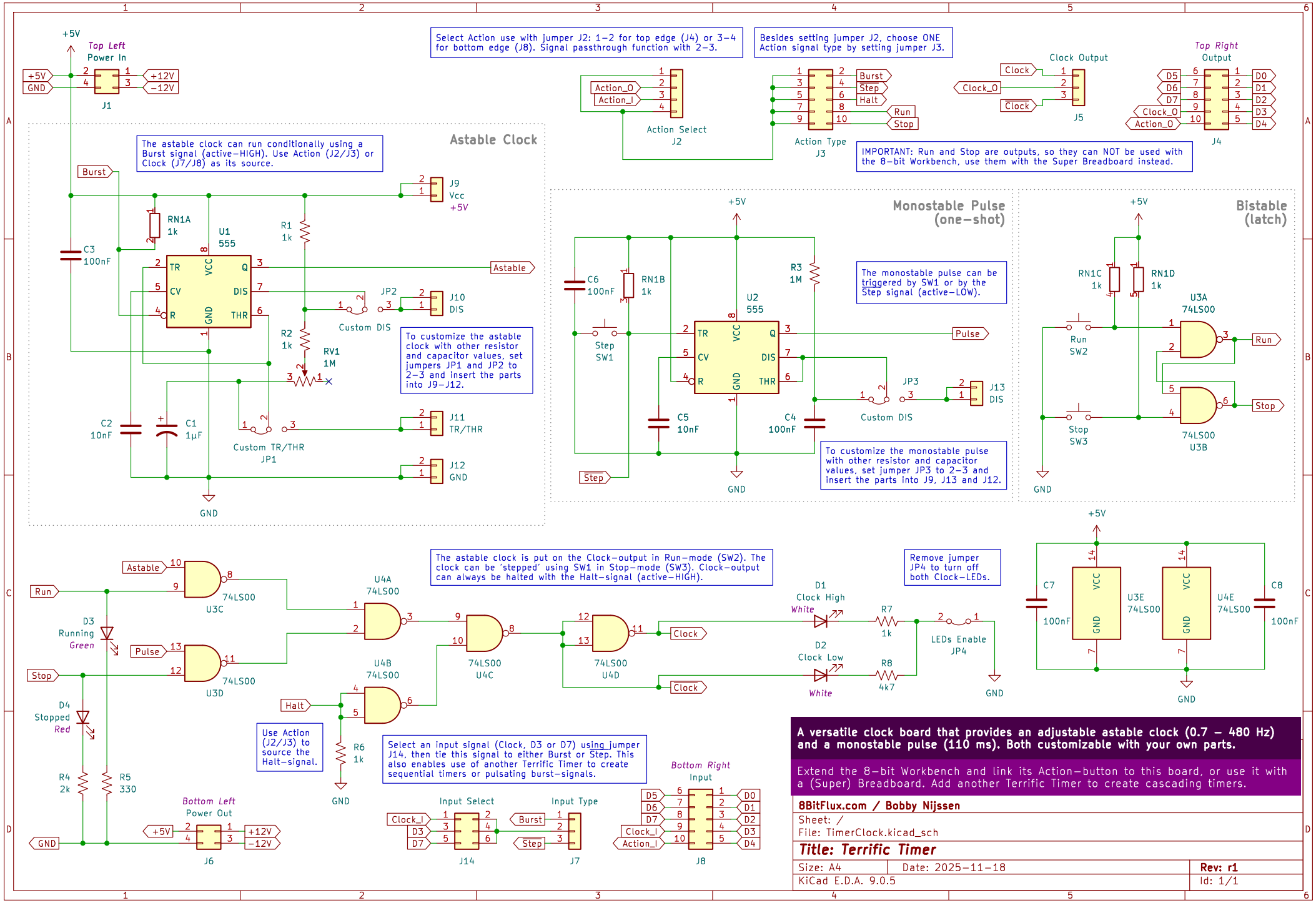
Select Action use with jumper J2: 1–2 for top edge (J4) or 3–4 for bottom edge (J8). Signal passthrough function with 2–3.
Besides setting jumper J2, choose ONE Action signal type by setting jumper J3.
Top Left Power In
J1
Action Select J2
Action Type J3
Clock Output J5
Top Right Output J4
IMPORTANT: Run and Stop are outputs, so they can NOT be used with the 8-bit Workbench, use them with the Super Breadboard instead.
Astable Clock
The astable clock can run conditionally using a Burst signal (active-HIGH). Use Action (J2/J3) or Clock (J7/J8) as its source.
To customize the astable clock with other resistor and capacitor values, set jumpers JP1 and JP2 to 2–3 and insert the parts into J9–J12.
U1 555
Custom DIS
Custom TR/THR JP1
Monostable Pulse (one-shot)
U2 555
The monostable pulse can be triggered by SW1 or by the Step signal (active-LOW).
To customize the monostable pulse with other resistor and capacitor values, set jumper JP3 to 2–3 and insert the parts into J9, J13 and J12.
Bistable (latch)
U3A 74LS00
U3B 74LS00
The astable clock is put on the Clock-output in Run-mode (SW2). The clock can be 'stepped' using SW1 in Stop-mode (SW3). Clock-output can always be halted with the Halt-signal (active-HIGH).
Remove jumper JP4 to turn off both Clock-LEDs.
Use Action (J2/J3) to source the Halt-signal.
Select an input signal (Clock, D3 or D7) using jumper J14, then tie this signal to either Burst or Step. This also enables use of another Terrific Timer to create sequential timers or pulsating burst-signals.
Bottom Left Power Out J6
Input Select J14
Input Type J7
Bottom Right Input J8
A versatile clock board that provides an adjustable astable clock (0.7 – 480 Hz) and a monostable pulse (110 ms). Both customizable with your own parts.
Extend the 8-bit Workbench and link its Action-button to this board, or use it with a (Super) Breadboard. Add another Terrific Timer to create cascading timers.
8BitFlux.com / Bobby Nijssen
Sheet: /
File: TimerClock.kicad_sch
Title: Terrific Timer
Size: A4
Date: 2025-11-18
Rev: r1
KiCad E.D.A. 9.0.5
Id: 1/1