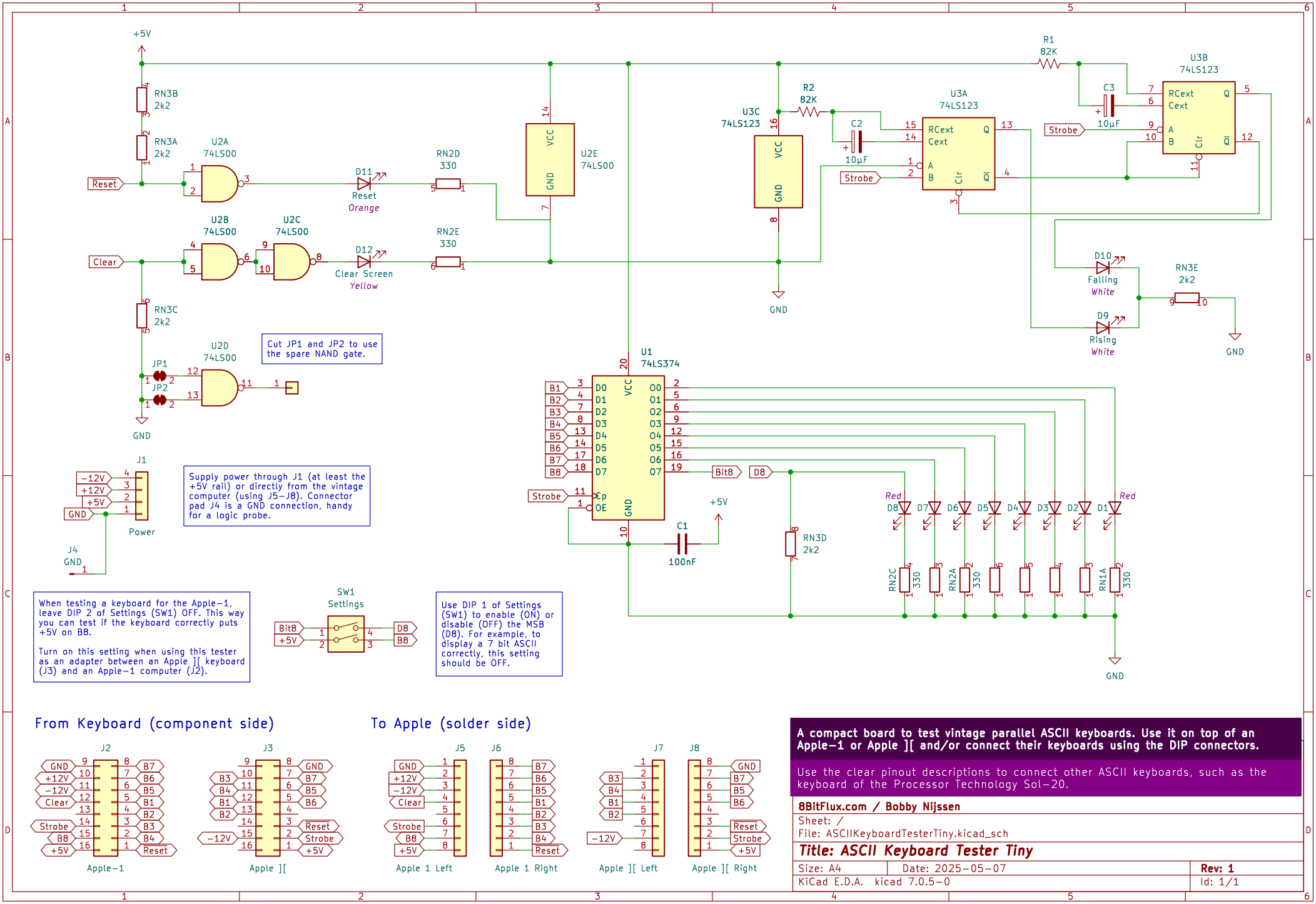

A compact board to test vintage parallel ASCII keyboards. Use it on top of an Apple–1 or Apple][and/or connect their keyboards using the DIP connectors.

Use the clear pinout descriptions to connect other ASCII keyboards, such as the keyboard of the Processor Technology Sol–20.

8BitFlux.com / Bobby Nijssen

Sheet: /
File: ASCIIKeyboardTesterTiny.kicad_sch

Title: ASCII Keyboard Tester Tiny

Size: A4	Date: 2025–05–07	**Rev: 1**
KiCad E.D.A. kicad 7.0.5–0		Id: 1/1