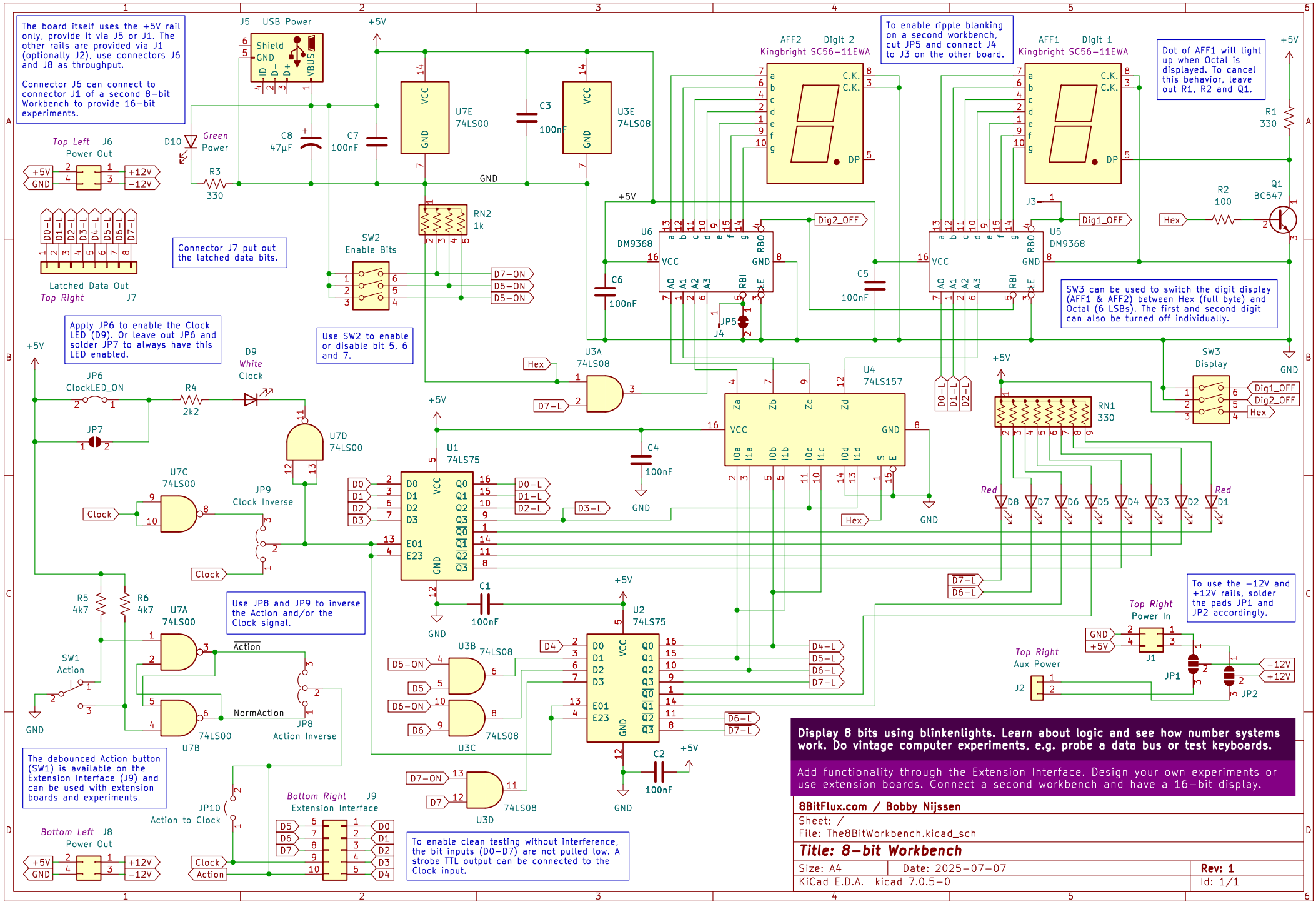
The board itself uses the +5V rail only, provide it via J5 or J1. The other rails are provided via J1 (optionally J2), use connectors J6 and J8 as throughput.
Connector J6 can connect to connector J1 of a second 8-bit Workbench to provide 16-bit experiments.
J5 USB Power
Shield
GND
ID
D-
D+
VBUS
+5V
Top Left J6
Power Out
+5V
GND
+12V
-12V
D10
Green
Power
R3
330
C8
47µF
C7
100nF
U7E
74LS00
C3
100nF
U3E
74LS08
GND
AFF2 Digit 2
Kingbright SC56-11EWA
To enable ripple blanking on a second workbench, cut JP5 and connect J4 to J3 on the other board.
AFF1 Digit 1
Kingbright SC56-11EWA
Dot of AFF1 will light up when Octal is displayed. To cancel this behavior, leave out R1, R2 and Q1.
R1
330
R2
100
Q1
BC547
Hex
J3
Dig1_OFF
Dig2_OFF
RN2
1k
SW2
Enable Bits
D7-ON
D6-ON
D5-ON
Connector J7 put out the latched data bits.
Latched Data Out
Top Right J7
D0-L
D1-L
D2-L
D3-L
D4-L
D5-L
D6-L
D7-L
U6
DM9368
U5
DM9368
C6
100nF
C5
100nF
JP5
J4
SW3 can be used to switch the digit display (AFF1 & AFF2) between Hex (full byte) and Octal (6 LSBs). The first and second digit can also be turned off individually.
Apply JP6 to enable the Clock LED (D9). Or leave out JP6 and solder JP7 to always have this LED enabled.
Use SW2 to enable or disable bit 5, 6 and 7.
JP6
ClockLED_ON
R4
2k2
D9
White
Clock
JP7
U7D
74LS00
U3A
74LS08
U4
74LS157
SW3
Display
RN1
330
U7C
74LS00
Clock
JP9
Clock Inverse
U1
74LS75
C4
100nF
Red
D8
D7
D6
D5
D4
D3
D2
D1
R5
4k7
R6
4k7
U7A
74LS00
Action
SW1
Action
NormAction
JP8
Action Inverse
U7B
74LS00
Use JP8 and JP9 to inverse the Action and/or the Clock signal.
C1
100nF
U2
74LS75
U3B
74LS08
U3C
74LS08
U3D
74LS08
C2
100nF
To use the -12V and +12V rails, solder the pads JP1 and JP2 accordingly.
Top Right
Power In
J1
JP1
JP2
Top Right
Aux Power
J2
The debounced Action button (SW1) is available on the Extension Interface (J9) and can be used with extension boards and experiments.
JP10
Action to Clock
Bottom Right J9
Extension Interface
Bottom Left J8
Power Out
To enable clean testing without interference, the bit inputs (D0-D7) are not pulled low. A strobe TTL output can be connected to the Clock input.
Display 8 bits using blinkenlights. Learn about logic and see how number systems work. Do vintage computer experiments, e.g. probe a data bus or test keyboards.
Add functionality through the Extension Interface. Design your own experiments or use extension boards. Connect a second workbench and have a 16-bit display.
8BitFlux.com / Bobby Nijssen
Sheet: /
File: The8BitWorkbench.kicad_sch
Title: 8-bit Workbench
Size: A4
Date: 2025-07-07
Rev: 1
KiCad E.D.A. kicad 7.0.5-0
Id: 1/1